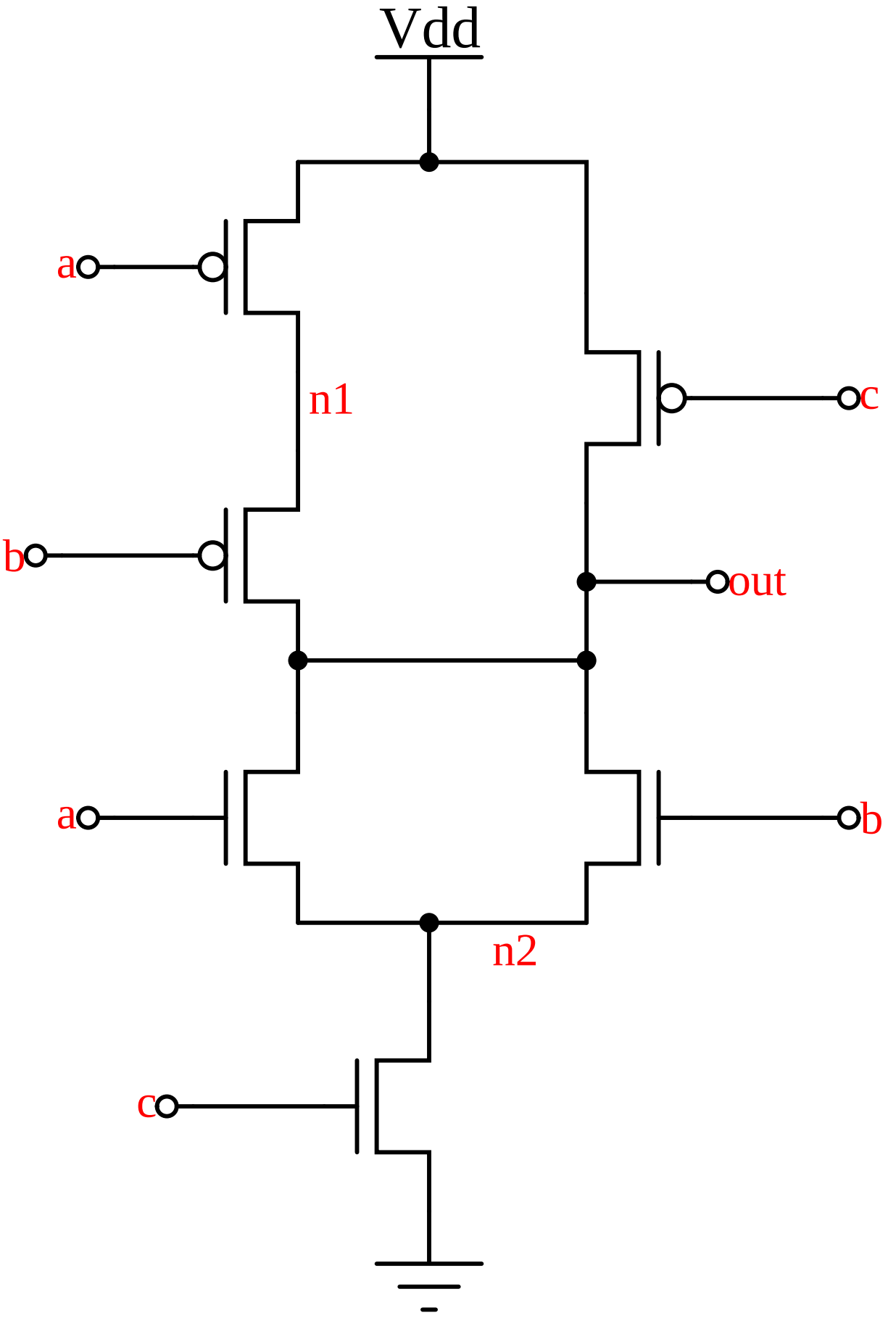
Vdd
a
n1
c
b
out
a
b
n2
c